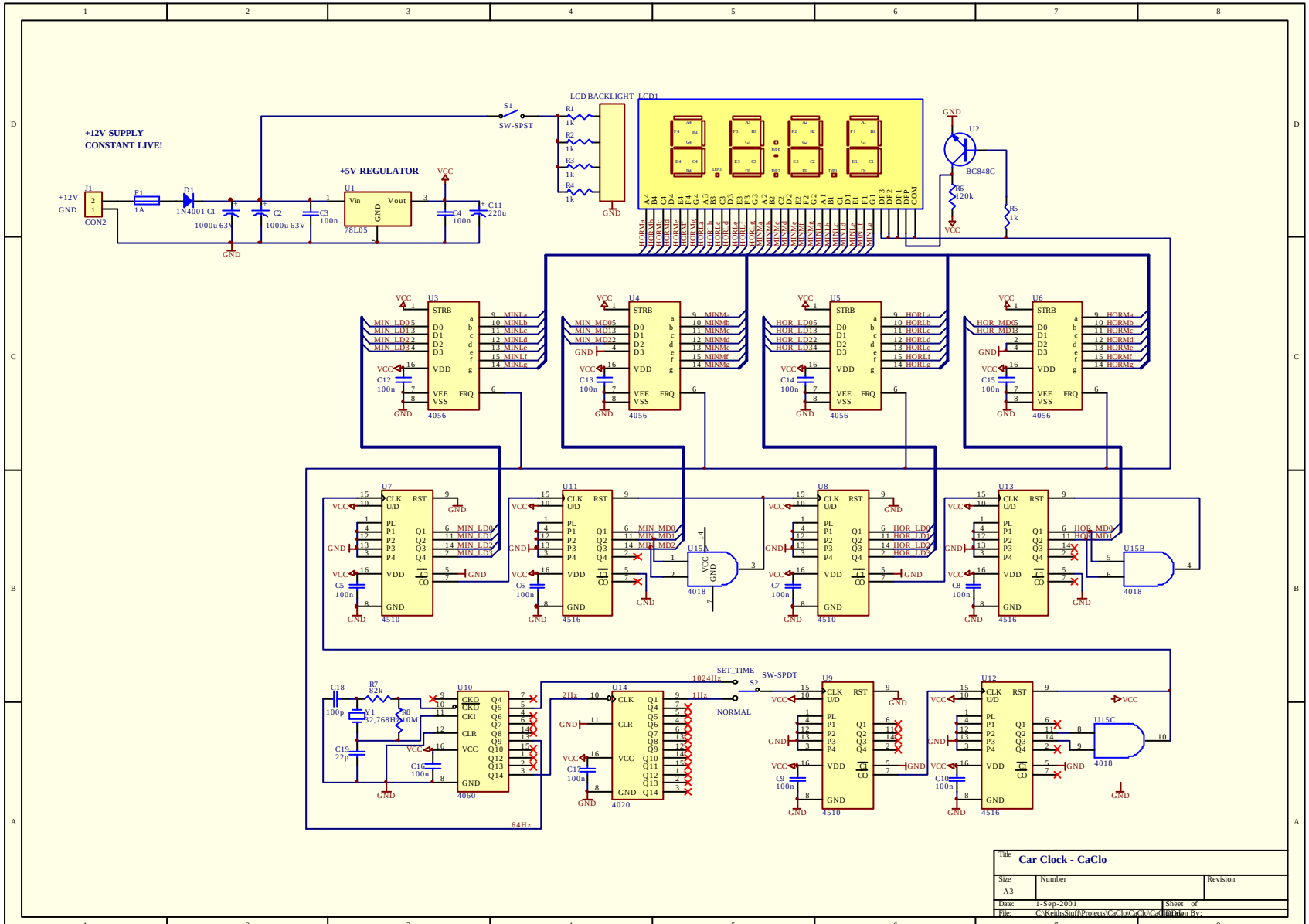
+12V SUPPLY
CONSTANT LIVE!
+5V REGULATOR
LCD BACKLIGHT
LCD1
SW-SPST
SW-SPDT
SET_TIME
NORMAL
1024Hz
1Hz
2Hz
64Hz
Title
Car Clock - CaClo
Size
A3
Number
Revision
Date:
1-Sep-2001
Sheet of
File:
C:\KeithsStuff\Projects\CaClo\CaClo\CaClo.Drn
Drawn By: