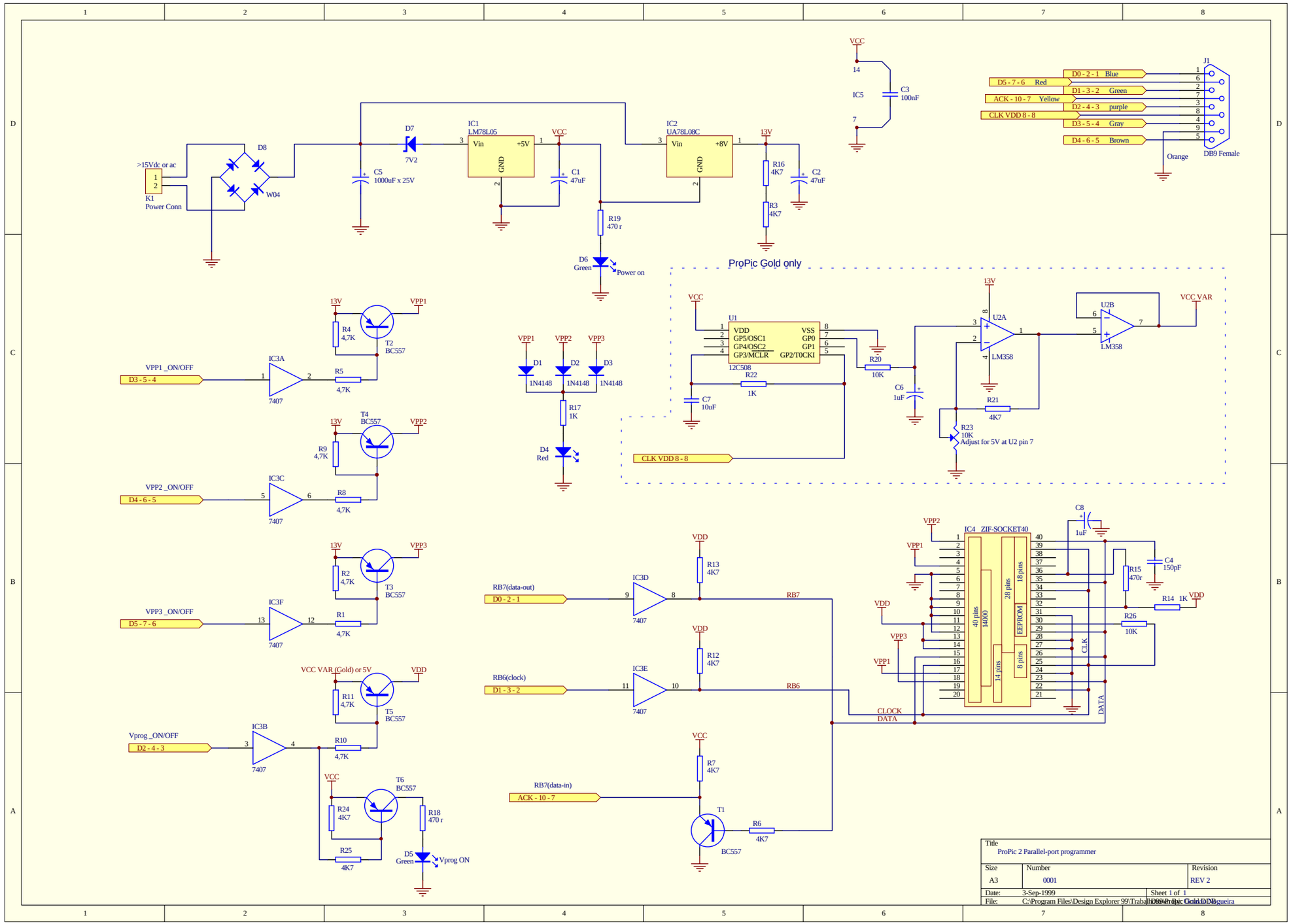

>15Vdc or ac
K1
Power Conn
D8
W04
D7
7V2
C5
1000uF x 25V
IC1
LM78L05
Vin
+5V
GND
VCC
C1
47uF
IC2
UA78L08C
Vin
+8V
GND
13V
R16
4K7
R3
4K7
C2
47uF
R19
470 r
D6
Green
Power on
VCC
14
IC5
7
C3
100nF
J1
D0 - 2 - 1 Blue
D5 - 7 - 6 Red
D1 - 3 - 2 Green
ACK - 10 - 7 Yellow
D2 - 4 - 3 purple
CLK VDD 8 - 8
D3 - 5 - 4 Gray
D4 - 6 - 5 Brown
Orange
DB9 Female
ProPic Gold only
U1
VDD
GP5/OSC1
GP4/OSC2
GP3/MCLR
VSS
GP0
GP1
GP2/T0CKI
12C508
R22
1K
C7
10uF
R20
10K
C6
1uF
U2A
LM358
U2B
LM358
VCC VAR
R21
4K7
R23
10K
Adjust for 5V at U2 pin 7
CLK VDD 8 - 8
VPP1
VPP2
VPP3
D1
D2
D3
1N4148
R17
1K
D4
Red
VPP1 _ON/OFF
D3 - 5 - 4
IC3A
7407
R4
4,7K
T2
BC557
R5
4,7K
VPP2 _ON/OFF
D4 - 6 - 5
IC3C
R9
4,7K
T4
BC557
R8
4,7K
VPP3 _ON/OFF
D5 - 7 - 6
IC3F
R2
4,7K
T3
BC557
R1
4,7K
VCC VAR (Gold) or 5V
VDD
Vprog _ON/OFF
D2 - 4 - 3
IC3B
R11
4,7K
T5
BC557
R10
4,7K
T6
BC557
R24
4K7
R25
4K7
R18
470 r
D5
Green
Vprog ON
RB7(data-out)
D0 - 2 - 1
IC3D
R13
4K7
RB7
RB6(clock)
D1 - 3 - 2
IC3E
R12
4K7
RB6
RB7(data-in)
ACK - 10 - 7
R7
4K7
T1
BC557
R6
4K7
CLOCK
DATA
IC4 ZIF-SOCKET40
40 pins
14000
28 pins
18 pins
EEPROM
14 pins
8 pins
CLK
DATA
C8
1uF
C4
150pF
R15
470r
R14 1K
R26
10K
Title
ProPic 2 Parallel-port programmer
Size
A3
Number
0001
Revision
REV 2
Date: 3-Sep-1999
Sheet 1 of 1
File: C:\Program Files\Design Explorer 99\Trabalhos\ProPic Gold.DDB